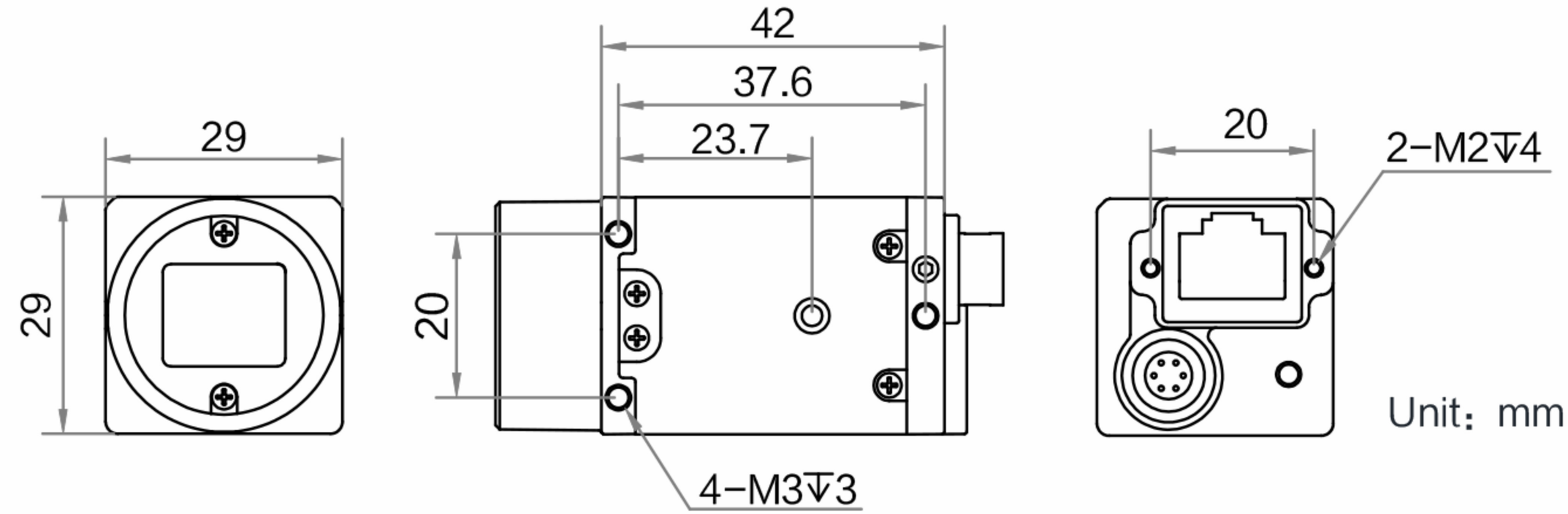RevNo	Revision note	Date	Signature	Checked